IMAO® fixtureworks®

Spring Clamps

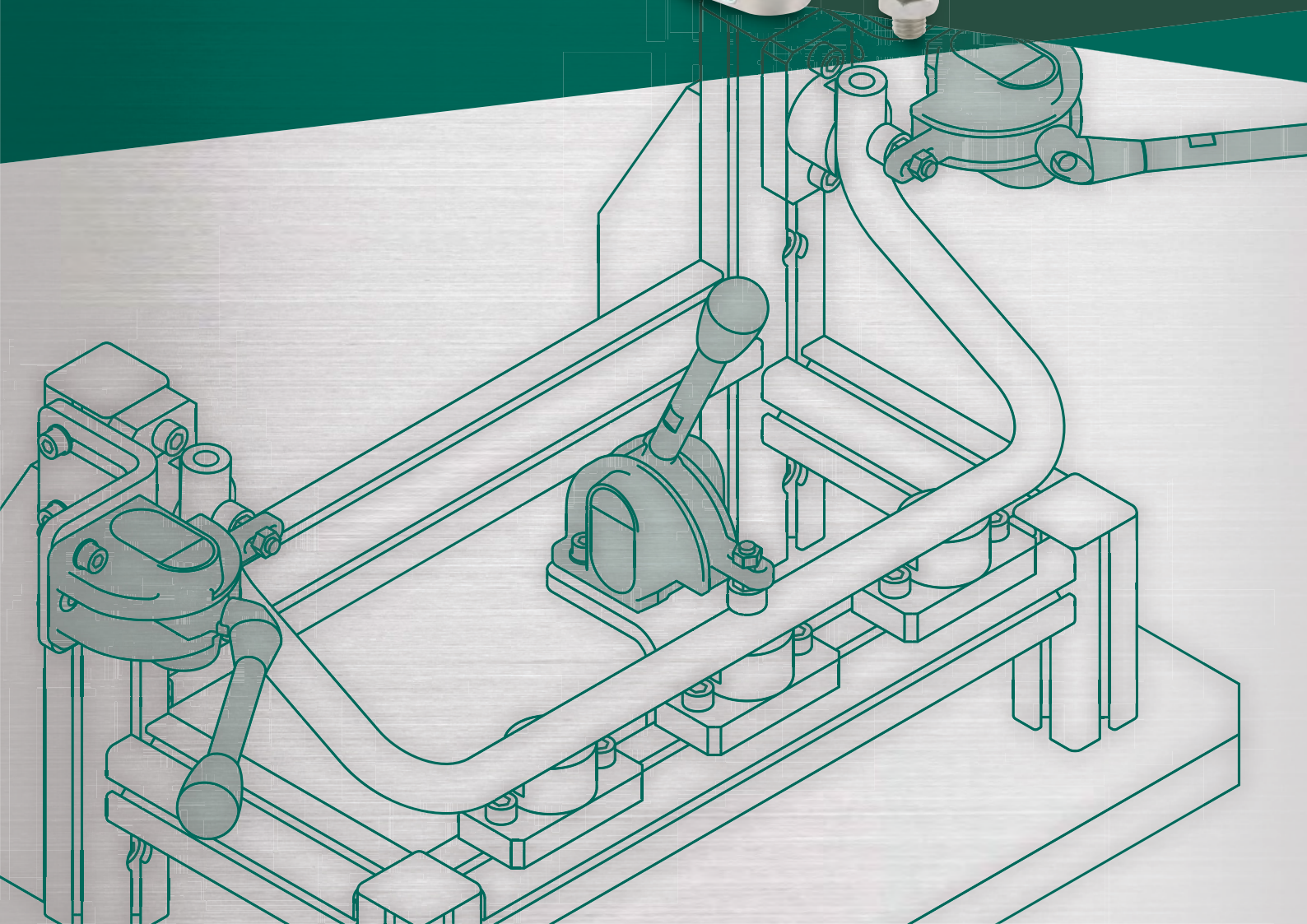

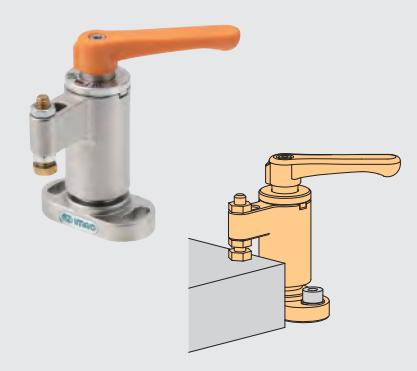

SPRING SWING CLAMPS

Part No. QLSWC

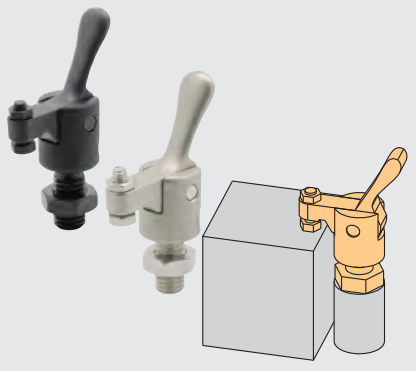

VERTICAL-HANDLE HOLD-DOWN SNAP CLAMPS(Mini)

Part No. QLSNDM

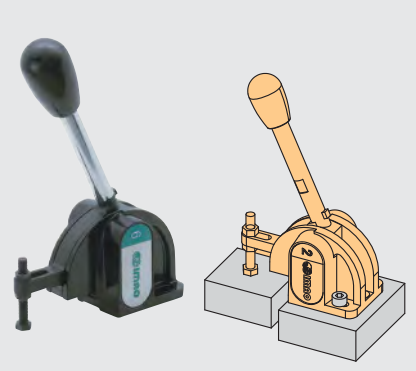

VERTICAL-HANDLE HOLD-DOWN SNAP CLAMPS

Part No. QLSND

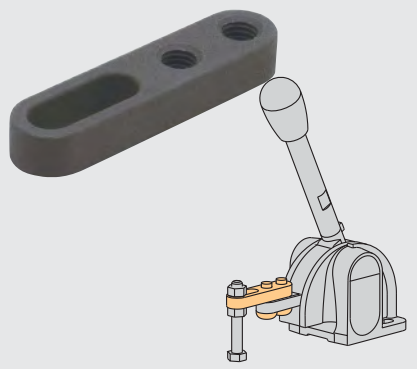

EXTENSION ARM

Part No. QLSND-EX20

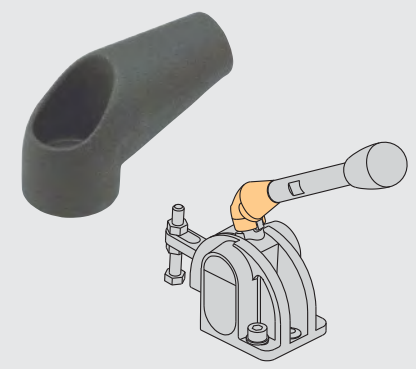

ANGLE ADAPTOR

Part No. QLSND-AN10

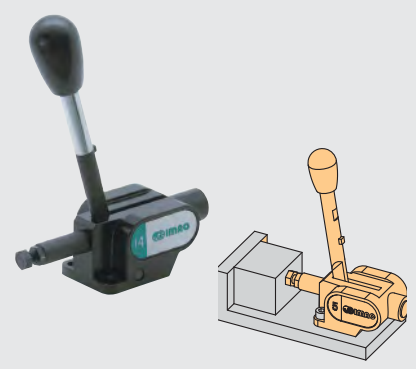

PUSH-PULL SNAP CLAMPS

Part No. QLSNS

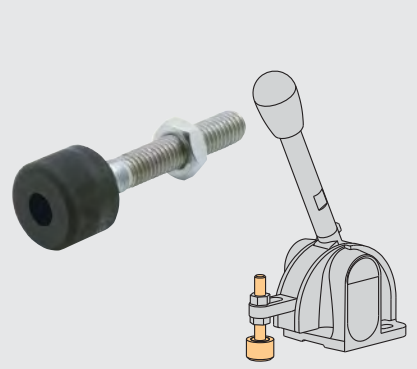

CLAMPING SPINDLES

Part No. UB

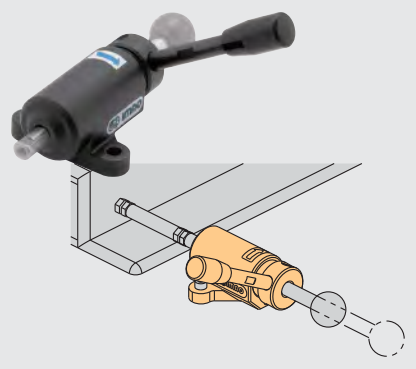

THRUST CLAMPS

Part No. QLRC

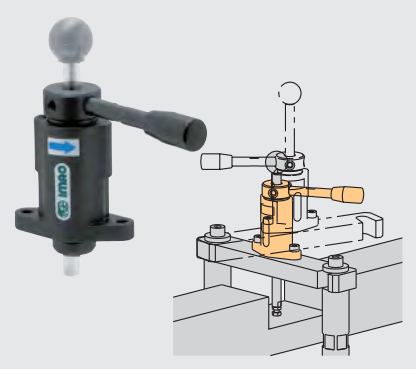

THRUST CLAMPS (Vertical)

Part No. QLRCF

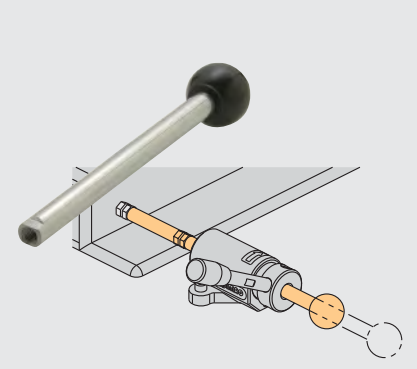

CLAMPING BARS

Part No. QLRCS

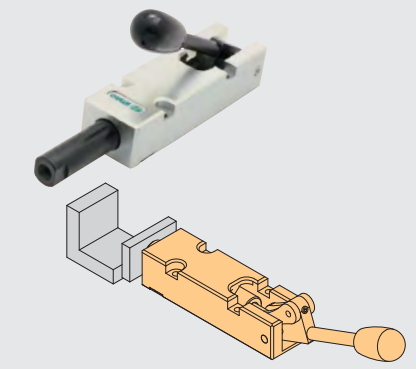

PRECISION THRUST CLAMPS

Part No. QLPCT

IMAO® fixtureworks®

QLSWC SPRING SWING CLAMPS

ROHS

IMAO

★Key Point

Handle clicks at the clamping end point.

Body	Arm	Cam Shaft
S45C steel Quenched and tempered Electroless nickel plated	SCM440 steel Quenched and tempered Electroless nickel plated	SKS3 steel Quenched and tempered Electroless nickel plated
Clamping Spindle	**Handle**	
Brass	Polyamide (glass-fiber reinforced) Orange	

Counterclockwise Clamping

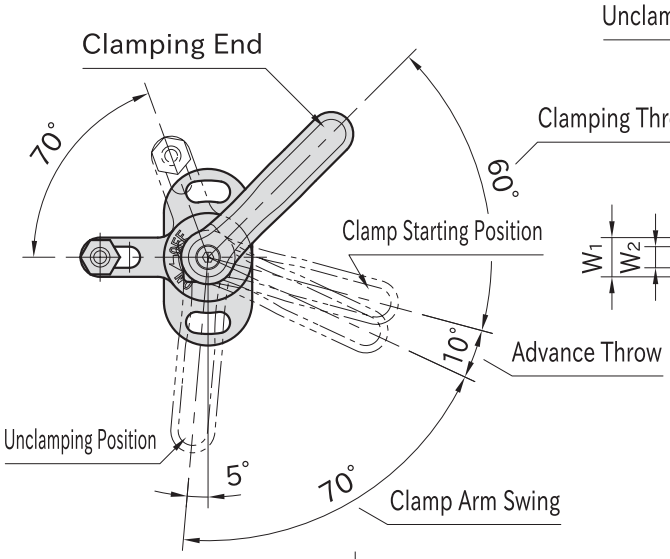

Clockwise Clamping

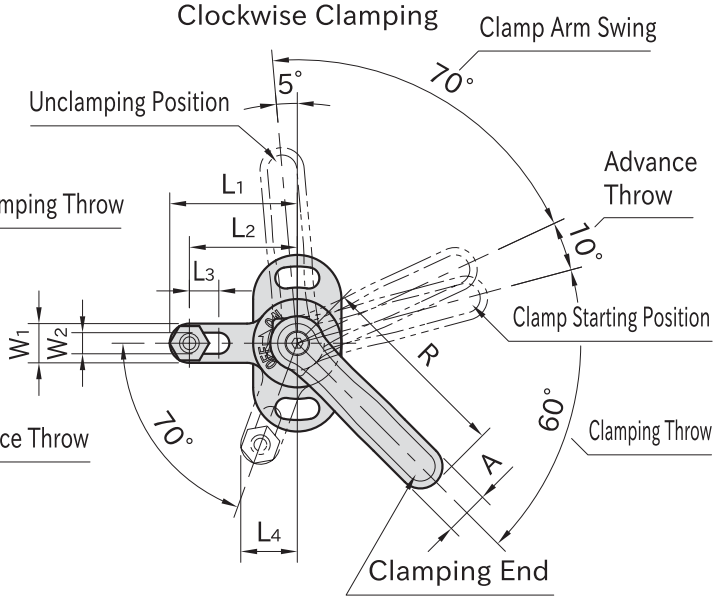

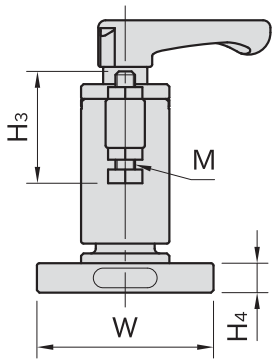

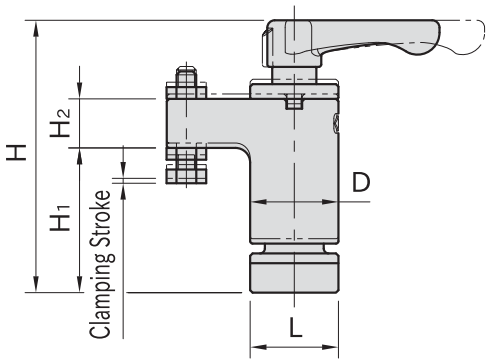

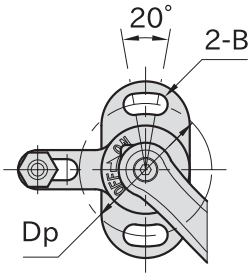

Mounting Holes

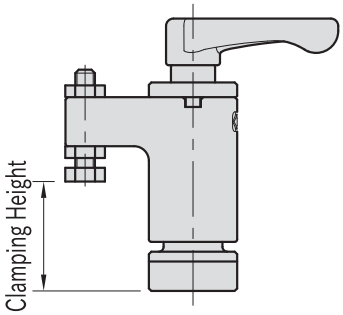

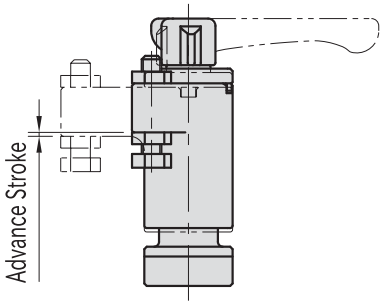

Part Number	Clamping Direction	Clamping Height *) Min.	Clamping Height *) Max.	Clamping Stroke	Advance Stroke	L_2	L_3	L_1	L_4	W	L	H_4	B
QLSWC18R-18	CW	19.5 (19-20)	24.5 (24-25)	1	0.8	22	6	26	11.5	36	18	6	4.3
QLSWC18L-18	CCW												
QLSWC23R-32	CW	29 (28.3-29.7)	33 (32.3-33.7)	1.4	1.1	30	8	35	15.3	45	23	8	5.3
QLSWC23L-32	CCW												
QLSWC30R-55	CW	32.5 (31.7-33.2)	39 (38.2-39.7)	1.5	1.4	37		45	20.7	65	30	12	8.4
QLSWC30L-55	CCW												

*)Clamping height is adjustable within the listed range.

Part Number	Dp	H	D	W_1	W_2	H_2	H_1	M	H_3	R	A	Clamping Force (N) **)	Weight (g)
QLSWC18R-18	27	55	18	8	4.3	10	30	M4×0.7	22.8	40	9	180 (150-210)	100
QLSWC18L-18													
QLSWC23R-32	34	72	23	10	5.3	14	40	M5×0.8	28.5	50	11	320 (250-390)	210
QLSWC23L-32													
QLSWC30R-55	48	92	30	16	8.4	18	50	M8×1.25	40.5	63	13	550 (450-650)	500
QLSWC30L-55													

**) Values at the midpoint of the clamping stroke. It varies within the listed range depending on the contact point of the clamping spindle that decides the spring tension.

Feature

- Turn the handle after the arm swings into position, the cam shaft rotates along the guide pin to push down the arm. The clamping spindle contacts the workpiece and the cam shaft moves up and compresses the spring to clamp the workpiece.
- Easy clamping with one touch operation. Handle clicks at the clamping end point.
- Spring-loaded clamp provides constant clamping force with every cycle.

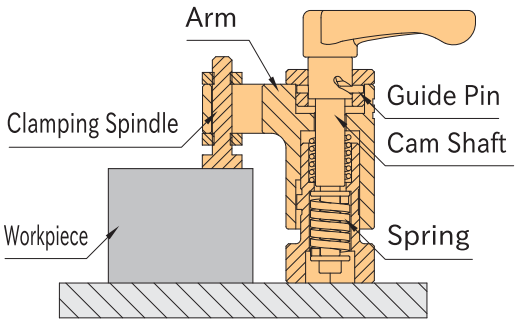

How To Use

■Operation of CW Type (Invert the operation for CCW type.)

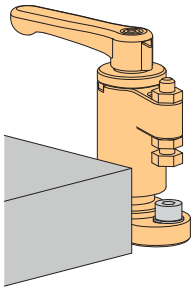

1. Unclamped
Load a workpiece.

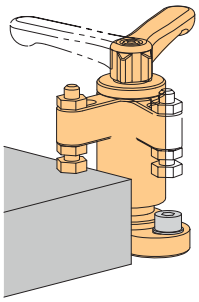

2. Arm Swing
Turn the handle to set the clamp arm in position.

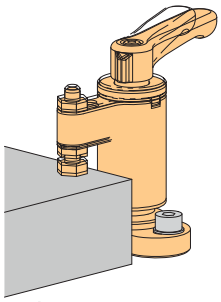

3. Clamping Setup
Continue turning the handle to set the spindle close to the workpiece.

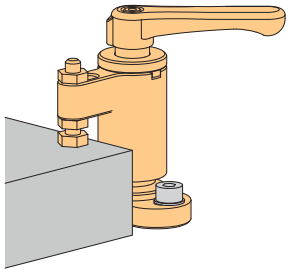

4. Clamping
Turn the handle to the clamping end position where the handle clicks.

■How to Adjust Clamping Height

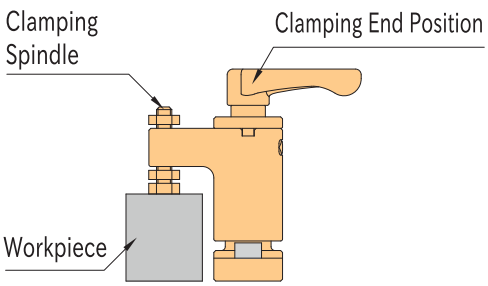

1. Adjust the clamping spindle until it contacts the workpiece at the clamping end position.

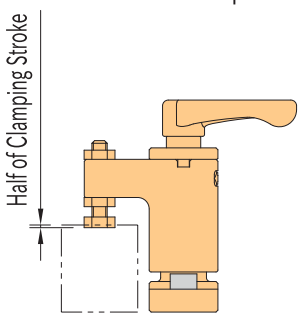

2. Project the clamping spindle by roughly half of the clamping stroke and fix it with the nuts.

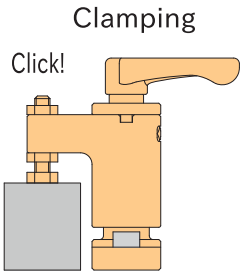

3. Setting Completed

QLSNDM

VERTICAL-HANDLE HOLD-DOWN SNAP CLAMPS (Mini)

RoHS Stainless Steel

IMAO

(Black Oxide Finish) (Stainless Steel) (Electroless Nickel Plated)

Type	Body	Clamping Arm / Handle	Clamping Spindle
QLSNDM08	S45C steel Black oxide finish	SCM440 steel Quenched and tempered Black oxide finish	SUS304 stainless steel
QLSNDM12			SCM435 steel Quenched and tempered Black oxide finish
QLSNDM08-SUS QLSNDM12-SUS	SCS13 steel (equivalent to SUS304)	SCS13 steel (equivalent to SUS304)	SUS304 stainless steel
QLSNDM08-NP QLSNDM12-NP	S45C steel Electroless Nickel Plated	SCM440 steel Electroless Nickel Plated	

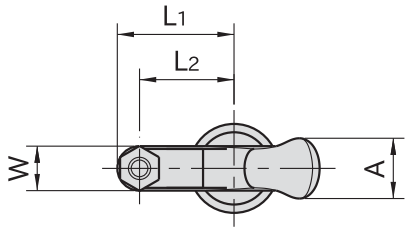

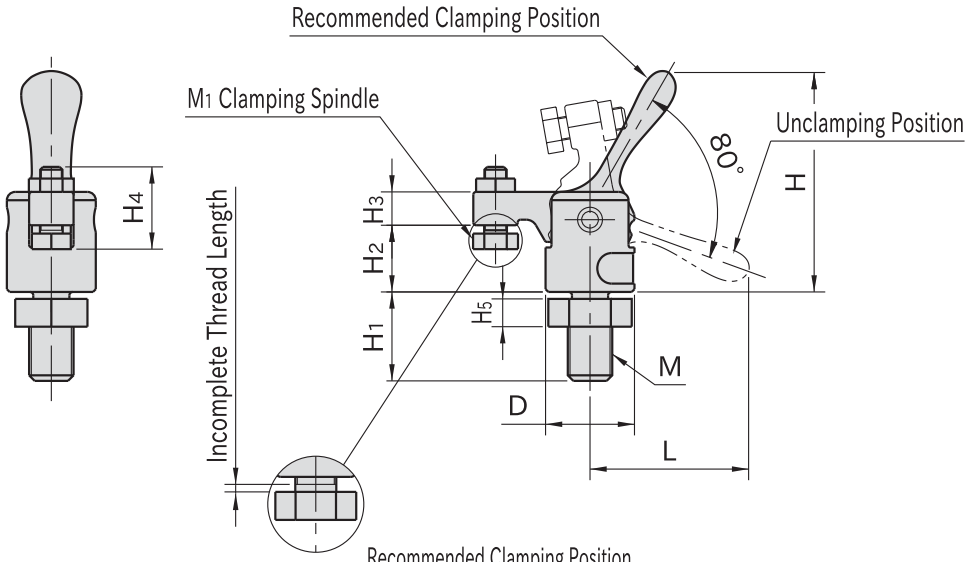

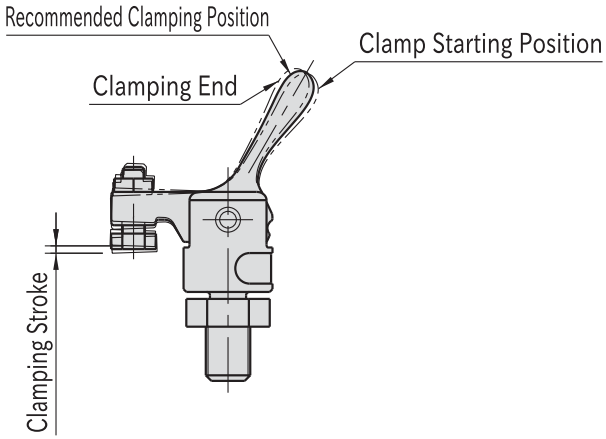

Type	Clamping Stroke	L_2	M	H_1	H	D	L_1	W	H_3	H_2	M_1	H_4	L	A	H_5
QLSNDM08-01	1	17	M 8×1.25	16	39.5	16	21	8	6	12	M4×0.7-12L Incomplete Thread Length :1	15	28.5	11	5
QLSNDM12-01	1.5	22	M12×1.75	24	53.5	22	27	10	8	17	M5×0.8-15L Incomplete Thread Length :1.5	18.5	38	13	7
QLSNDM12-03															

QLSNDM (Black Oxide Finish)

Part Number	Handle Operating Load (N)	Clamping Force (N)	Weight (g)
QLSNDM08-01	5	10	50
QLSNDM12-01			120
QLSNDM12-03	13	30	

QLSNDM-SUS (Stainless Steel)

Part Number	Handle Operating Load (N)	Clamping Force (N)	Weight (g)
QLSNDM08-01-SUS	5	10	50
QLSNDM12-01-SUS			120
QLSNDM12-03-SUS	13	30	

QLSNDM-NP (Electroless Nickel Plated)

Part Number	Handle Operating Load (N)	Clamping Force (N)	Weight (g)
QLSNDM08-01-NP	5	10	50
QLSNDM12-01-NP			120
QLSNDM12-03-NP	13	30	

Feature

- The clamp clicks when clamping is done.
- Perfect for clamping of a small part, and for use in limited space.
- Designed for fingertip handle operation.
- The handle is lockesd at the unclamping position.
- Uses a snap-on system (single locking).

How To Use

Use a BJ601 Small Cylindrical Risers to raise these clamps.

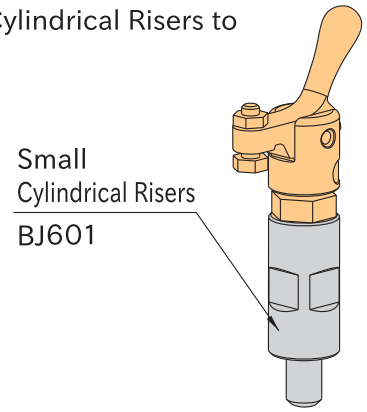

Related Product

UB Clamping Spindles with a plastic tip are available for clamping without marring a part.

Note

- The clamping forces and handle operating loads stated above can vary by up to ± 20%.
- When the reaction force(F) becomes greater than the clamping force, clamping is lifted.

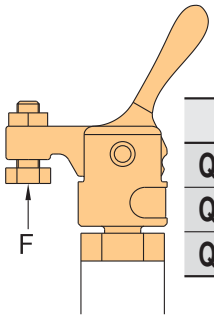

Type	Clamping Is Lifted When :
QLSNDM08-01	F is larger than 10N
QLSNDM12-01	
QLSNDM12-03	F is larger than 30N

How To Set Handle To Recommended Clamping Position

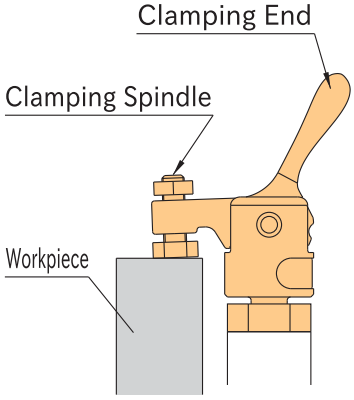

1. Set the clamping spindle to contact a workpiece at

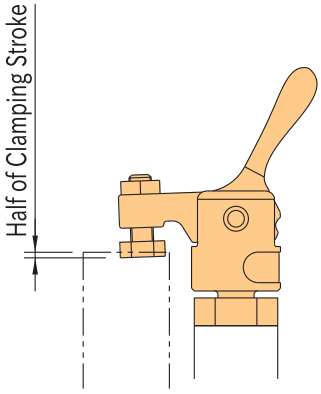

2. Project the clamping spindle by about half of the clamping stroke

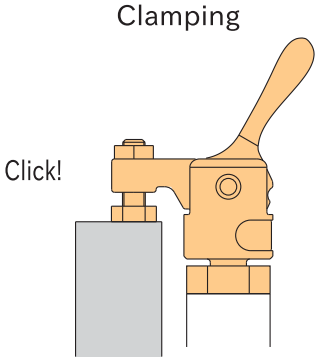

3.Setting Completed

QLSND VERTICAL-HANDLE HOLD-DOWN SNAP CLAMPS

Clamping Mode

Unclamping Mode

Body	Clamping Arm	Handle	Knob	Clamping Spindle
ZDC2 steel Cation coating finish Black	SCM440 steel Quenched and tempered Black oxide finish	S45C steel Chrome plated	Phenolic plastic Black	SCM435 steel Quenched and tempered Black oxide finish

★Key Point

The handle clicks at clamping end.

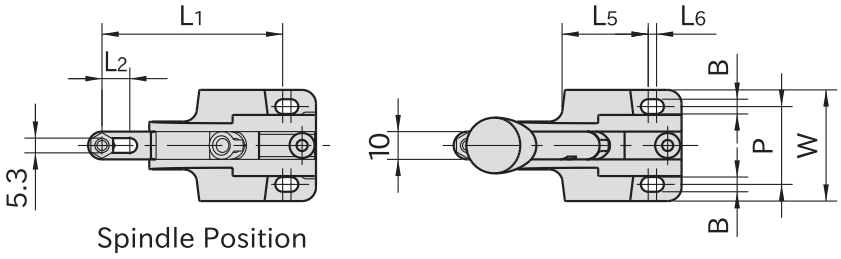

Spindle Position

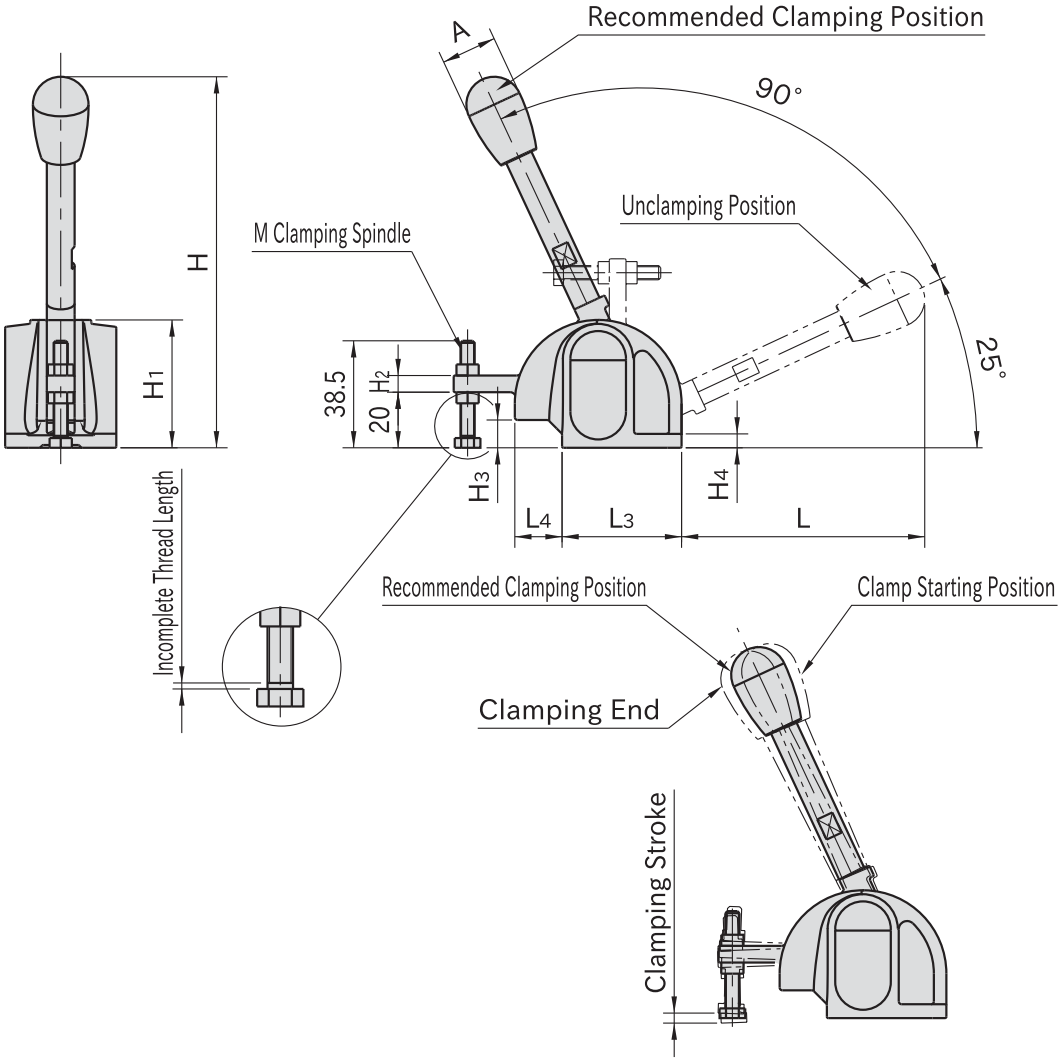

Part Number	Clamping Stroke	L_1	L_2	L_3	W	H_4	B	L_6	P	L_5	H max.	H_1	H_2	H_3
QLSND28-02	3	65	10	43	40	5	5.3	3	28	31	140	46	6	10
QLSND28-05														
QLSND30-03		75	12	48.5	42	6	6.4	6	30	32.5	158	53	8	12
QLSND30-06														

Part Number	L_4	M	L	A	Handle Operating Load (N)	Clamping Force (N)	Weight (g)
QLSND28-02	17	M5×0.8-35L Incomplete Thread Length :1.5	88	20	6	20	390
QLSND28-05					12	50	
QLSND30-03	22.5		98	26	6	30	520
QLSND30-06					12	60	

How To Set Handle To Recommended Clamping Position

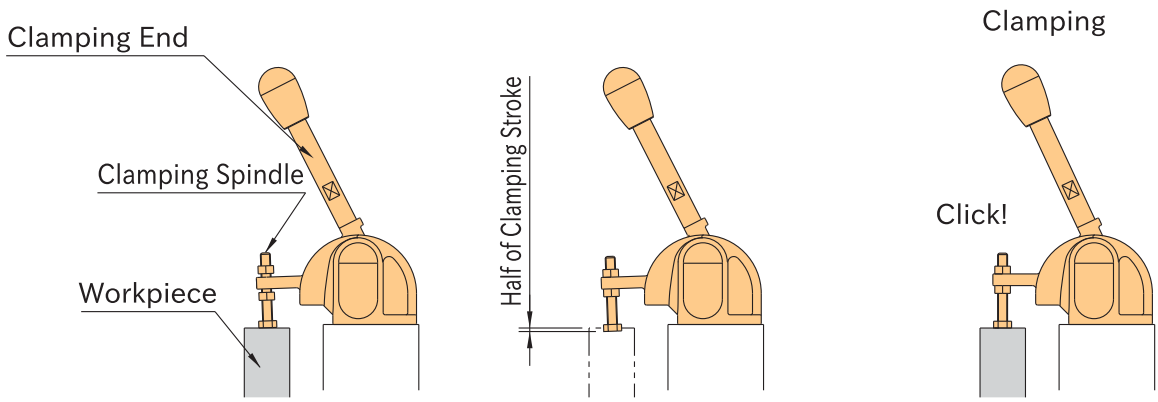

1. Set the clamping spindle to contact a workpiece at clamping end position.
2. Project the clamping spindle by about half of the clamping stroke and tighten the nut.
3. Setting Completed

Note

- The clamping forces and handle operating loads stated above can vary by up to ± 20%.
- When the reaction force(F) becomes greater than the clamping force, clamping is lifted.

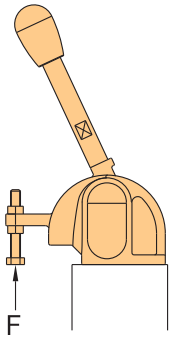

Part Number	Clamping Is Lifted When :
QLSND28-02	F > 20N
QLSND28-05	F > 50N
QLSND30-03	F > 30N
QLSND30-06	F > 60N

Feature

- The long handle facilitates clamping operation.
- The handle is locked at the unclamping position.
- Uses a snap-on system (double locking)

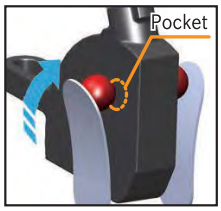

Related Product

- QLSND-EX20 Extension Arms to extend the clamp arm.
- QLSND-AN10 Angle Adaptors to set the handle in an angled position.
- UB Clamping Spindles to protect workpieces from being marred.

QLSND-EX20 EXTENSION ARM

RoHS Dedicated for Snap Clamps

IMAO

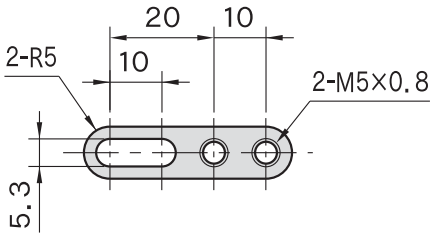

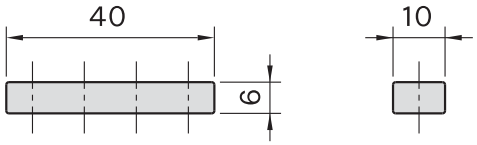

Body
S45C steel Black oxide finish

Part Number	Weight (g)
QLSND-EX20	12

Supplied With

Hex. socket head setscrew M5×0.8-14L ×2 pcs.

How To Use

Use to extend the clamping arm for clamping at a more distant point.

Face Mounting

Back Mounting

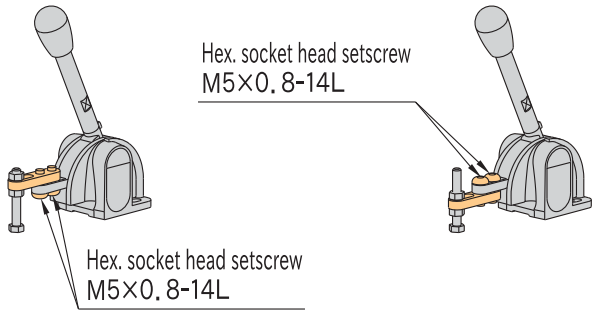

Clamping Forces Generated in Use of Extension Arms

Part Number	Clamping Force (N)
QLSND28-02	15
QLSND28-05	35
QLSND30-03	20
QLSND30-06	40

QLSND-AN10 ANGLE ADAPTOR

RoHS Dedicated for Snap Clamps

IMAO

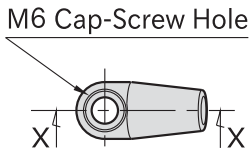

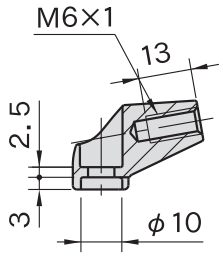

Cross Section X-X

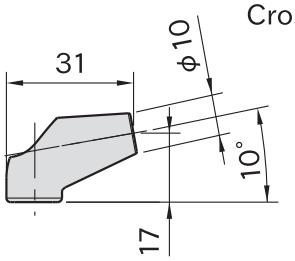

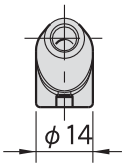

Part Number	Weight (g)
QLSND-AN10	12

Body
S45C steel Black oxide finish

Dimensions of Snap Clamps with Angular Adaptor Installed

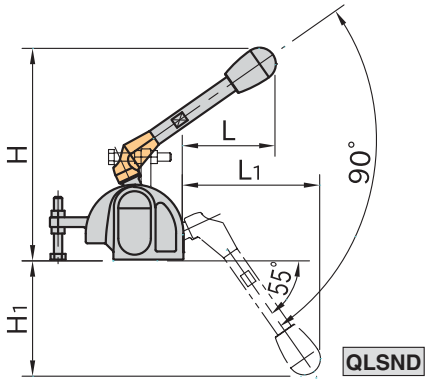

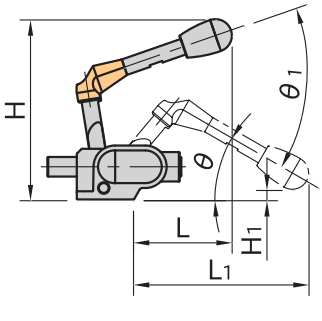

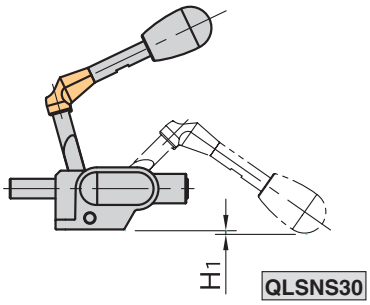

Type	H	L	H_1	L_1
QLSND28	130	57	71	84
QLSND30	145	61	79	92

Type	H	L	H_1	L_1	θ	θ_1
QLSNS28	110	60	6	107	30°	50°
QLSNS30	136	53	2	123	35°	60°

Supplied With

Hex.socket head cap screw M6×1-12L × 1pc.

How To Use

Remove the handle and then install an Angular Adaptor between the body and the handle.
(Use a wrench of nominal size 9 for removal of the handle.)

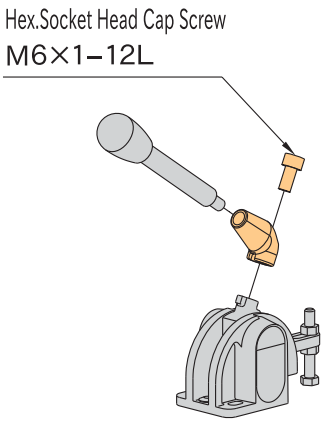

Perfect in applications where the handle can not be turned to the clamping position.

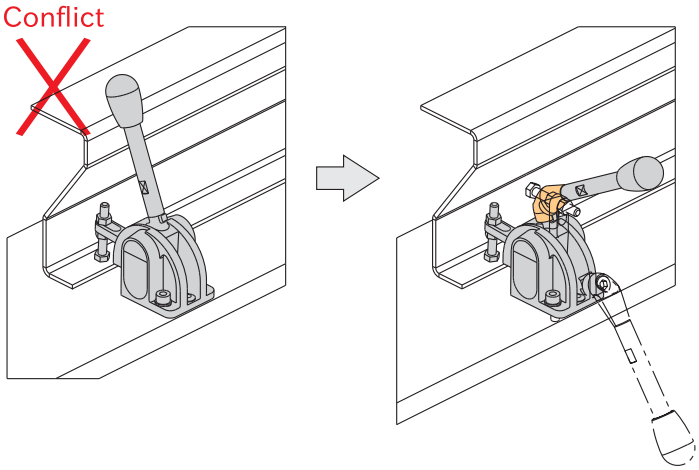

QLSNS PUSH-PULL SNAP CLAMPS

Clamping Mode

Unclamping Mode

Body	Handle Link	Shaft
ZDC2 steel Cation coating finish Black	SCM440 steel Quenched and tempered Black oxide finish	S25C steel Carburized nitriding hardened Black oxide finish
Lever	**Knob**	**Clamping Spindle**
S45C steel Chrome plated	Phenolic plastic Black	SCM435 steel Quenched and tempered Black oxide finish

★Key Point

The handle clicks at clamping end.

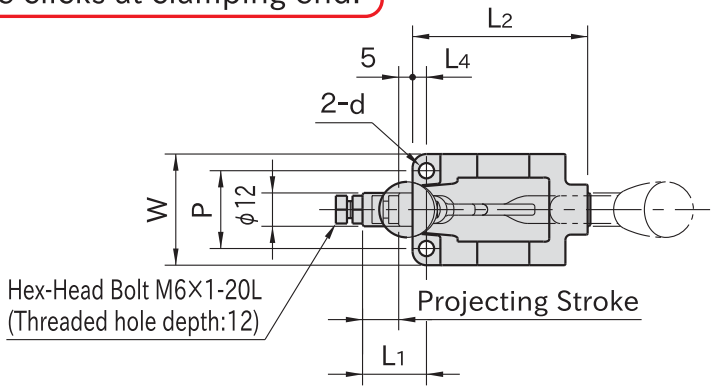

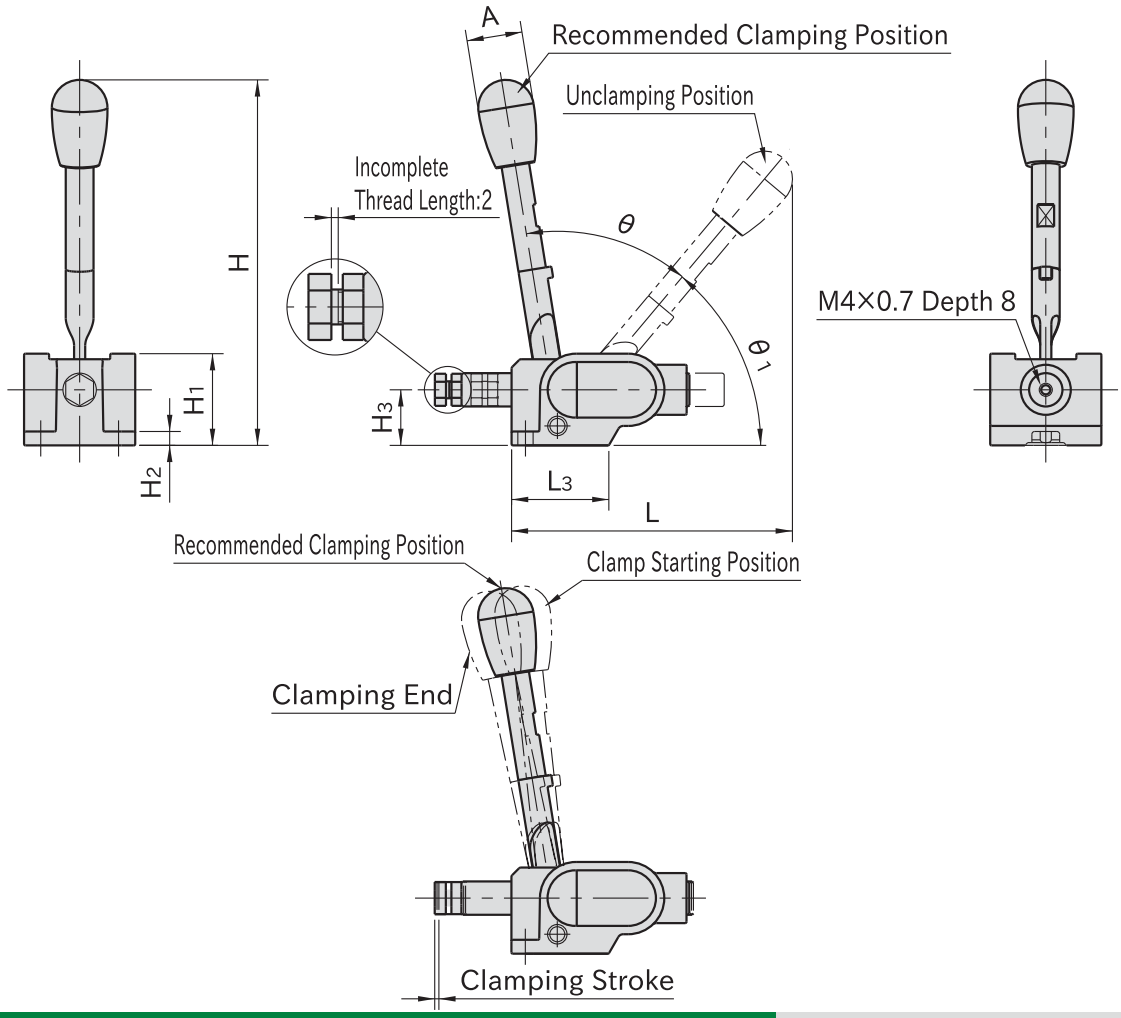

Part Number	Projecting Stroke	Clamping Stroke	H_3	L_1	L_2	L_3	W	H_2	d	L_4	P
QLSNS28-05	12	1.5	20	22	63	35	40	5	5.5	5	28
QLSNS28-12											
QLSNS30-07	22		25	33	80	42	42	6	6.5	6	30
QLSNS30-14											

Part Number	H max.	H_1	A	L	θ	θ_1	Handle Operating Load (N)	Clamping Force (N)	Weight (g)
QLSNS28-05	133	33	20	101	50°	50°	9	50	370
QLSNS28-12							20	120	
QLSNS30-07	157	38	26	131	60°	45°	6	70	500
QLSNS30-14							18	140	

How To Set Handle To Recommended Clamping Position

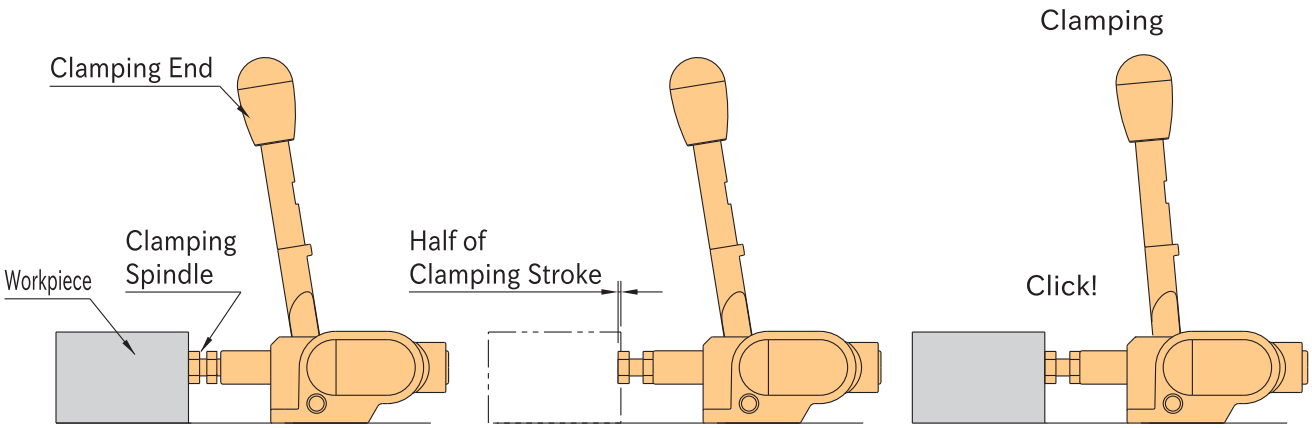

1. Set the clamping spindle to contact a workpiece at clamping end position.
2. Project the clamping spindle by about half of the clamping stroke and tighten the nut.
3. Setting Completed

Note

- The clamping forces and handle operationg loads stated above can vary by up to ± 20%.
- When the reaction force(F) becomes greater than the clamping force, clamping is lifted.

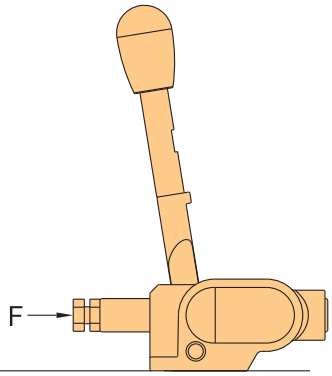

Part Number	Clamping Is Lifted When:
QLSNS28-05	F > 50N
QLSNS28-12	F > 120N
QLSNS30-07	F > 70N
QLSNS30-14	F > 140N

Feature

- The long handle facilitates clamping operation.
- The handle is locked at the unclamping position.
- Uses a snap-on system (double locking)

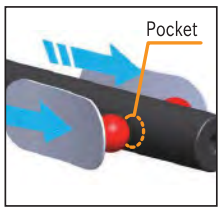

Related Product

- QLSND-AN10 Angle Adaptors to set the handle in an angled position.
- UB Clamping Spindles to protect workpieces from being marred.

UB CLAMPING SPINDLES

RoHS Dedicated for Snap Clamps

IMAO

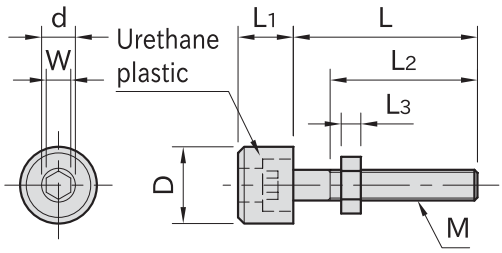

Part Number	M	L	D	L_1	L_2	L_3
UB4×15	M4×0.7	15	10	7	14	2.4
UB5×15	M5×0.8		12.5	9	13.5	3.2
UB5×30		30			24	
UB6×20	M6×1	20	15	10	18	3.6

Part Number	d	W	Weight (g)	Proper Snap Clamps
UB4×15	4.2	3	4	Mini Hold-Down
UB5×15	5.5	4	6	
UB5×30			8	Standard Hold-Down
UB6×20	6	5	10	Push-Pull

Tip	Screw	Hex. Nut
Black urethane plastic Shore A90	SCM435 steel Trivalent chromate plated	SS400 steel Trivalent chromate plated

Installation example

The urethane tip avoids marring soft or finished surfaces.

IMAO® fixtureworks®

QLRC THRUST CLAMPS

Light-Duty
(Marked with Blue Arrow)

Heavy-Duty
(Marked with Black Arrow)

Note: Clamping bar is not included.

Body/Lever Arm	Cam	Handle
S45C steel Black oxide finish	SCM415 steel Carburized-hardened Black oxide finish	Phenolic plastic Black matte

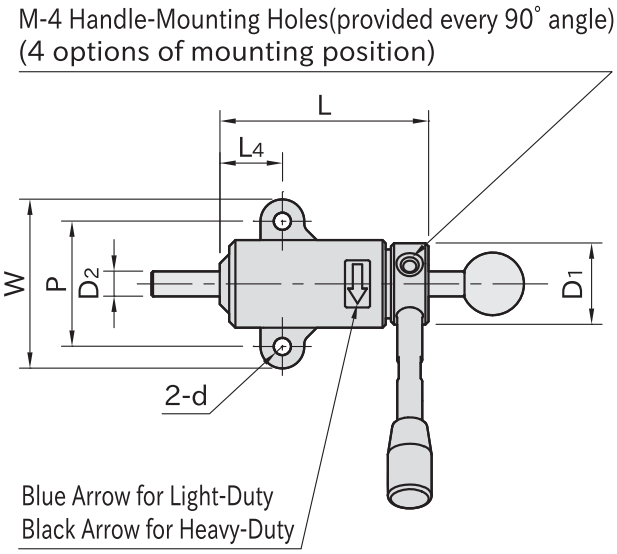

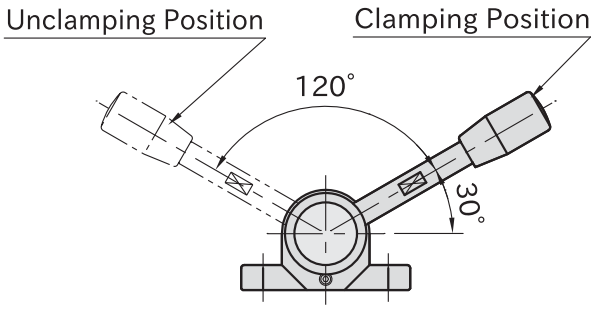

Clockwise Clamping

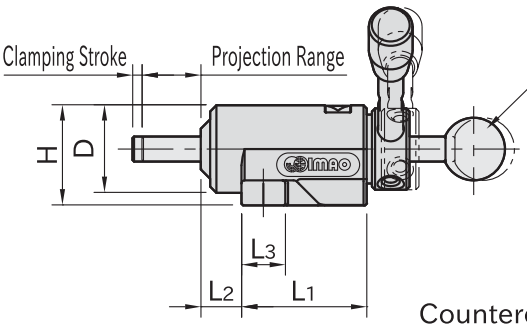

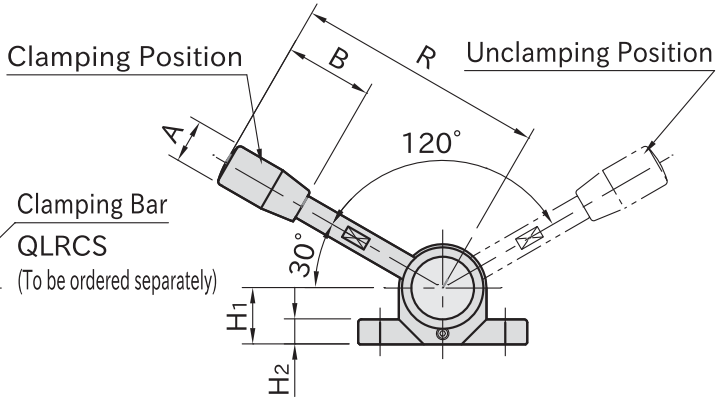

Counterclockwise Clamping

Type	Clamping Stroke	D_2	H_1	L_4	W	L_3	H_2	d	P	H	D	D_1	L	L_1	L_2	R	B	A	M
QLRC-08	1.5	8	18	20	54	14	8	5.5	40	32	28	26	68.5	40	13	80	28	14	M5×0.8
QLRC-12	2.3	12	25	30	80	20	12	9	60	45	40	36	93.7	55	20	132	50	21	M6×1

QLRC-L (Light-Duty)

Part Number	Clamping Direction	Allowable Operating Load (N)	Clamping Force (kN)	Weight (g)	Clamping-Bar Projection Range
QLRC-08R-L	CW	40	0.2	330	QLRCS-08100 0～ 30 QLRCS-08125 0～ 55 QLRCS-08150 0～ 80
QLRC-08L-L	CCW				
QLRC-12R-L	CW	100	0.7	930	QLRCS-12125 0～ 29 QLRCS-12150 0～ 54 QLRCS-12200 0～ 104
QLRC-12L-L	CCW				

QLRC (Heavy-Duty)

Part Number	Clamping Direction	Allowable Operating Load (N)	Clamping Force (kN)	Weight (g)	Clamping-Bar Projection Range
QLRC-08R	CW	80	0.5	330	QLRCS-08100 0～ 30 QLRCS-08125 0～ 55 QLRCS-08150 0～ 80
QLRC-08L	CCW				
QLRC-12R	CW	150	1.4	910	QLRCS-12125 0～ 29 QLRCS-12150 0～ 54 QLRCS-12200 0～ 104
QLRC-12L	CCW				

How To Use

■Operation of CW Type (Invert the operation for CCW type.)

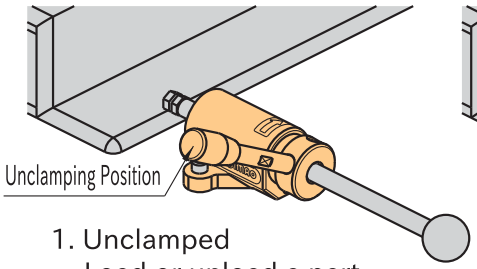

1. Unclamped
   Load or unload a part.

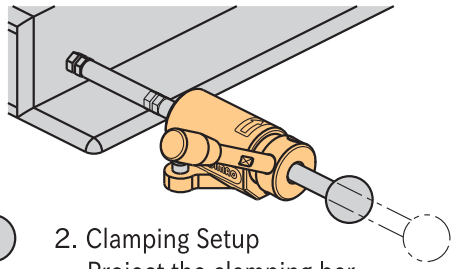

2. Clamping Setup
   Project the clamping bar until it contacts the part.

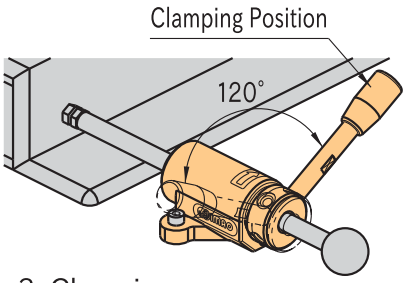

3. Clamping
   Turn the lever handle (120°) to the clamping position.

Feature

・Spring-loaded clamp that provides constant clamping force.
・Long clamping-bar projection range allows clamping a recessed part.
・Clamping Bars are not included (must be ordered separately).
(When using your own clamping bar, ensure that the diameter is finished to a h9 or better tolerance)

Note

When a reaction force (F) becomes greater than a clamping force, the clamping bar slides back to get a part unclamped.

Type	Clamp Releasing Force
QLRC-08-L	F>0.2kN
QLRC-12-L	F>0.7kN
QLRC-08	F>0.5kN
QLRC-12	F>1.4kN

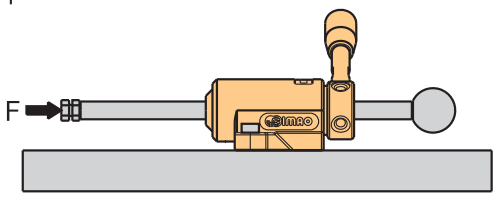

QLRCF THRUST CLAMPS (Vertical)

RoHS

IMAO

Light-Duty
(Marked with Blue Arrow)

Heavy-Duty
(Marked with Black Arrow)

Note: Clamping bar is not included.

Body/Lever Arm	Cam	Handle
S45C steel Black oxide finish	SCM415 steel Carburized-hardened Black oxide finish	Phenolic plastic Black matte

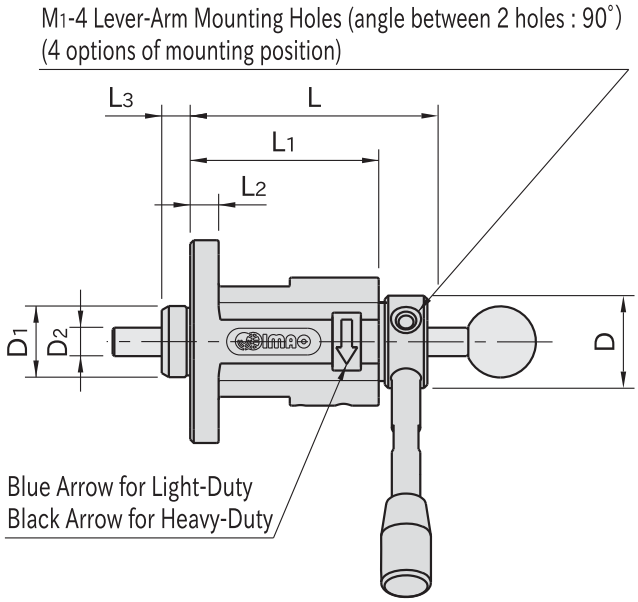

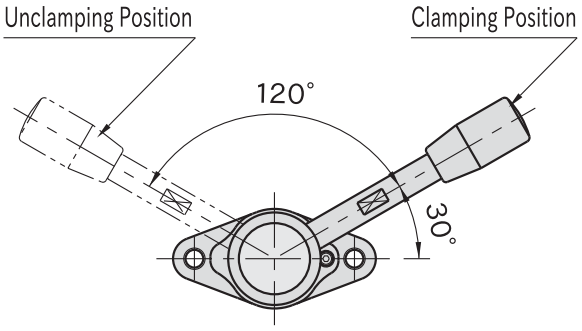

Clockwise Clamping

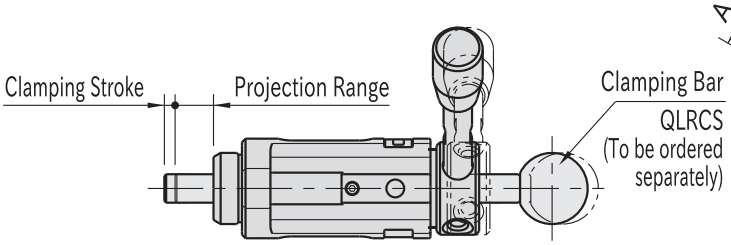

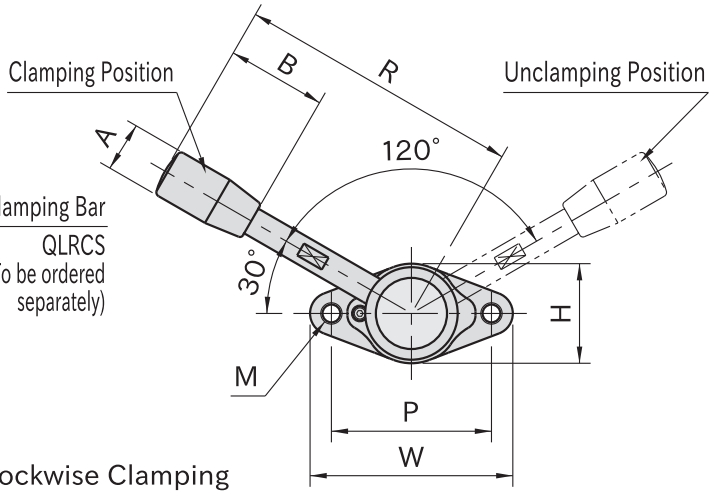

Counterclockwise Clamping

Type	Clamping Stroke	D_2	W	H	L_2	M	P	L	L_1	L_3	D	D_1 (−0.04 / −0.08)	R	B	A	M_1
QLRCF-08	1.5	8	57	28	8	M 6×1 (Prepared Hole 5.2)	45	68.5	53	8	26	20	80	28	14	M5×0.8
QLRCF-12	2.3	12	85	40	12	M10×1.5 (Prepared Hole 8.5)	65	90.7	72	12	36	30	132	50	21	M6×1

QLRCF-L (Light-Duty)

Part Number	Clamping Direction	Allowable Operating Load (N)	Clamping Force (kN)	Weight (g)	Clamping-Bar Projection Range
QLRCF-08R-L	CW	40	0.2	330	QLRCS-08100 0~22 QLRCS-08125 0~47 QLRCS-08150 0~72
QLRCF-08L-L	CCW				
QLRCF-12R-L	CW	100	0.7	930	QLRCS-12125 0~20 QLRCS-12150 0~45 QLRCS-12200 0~95
QLRCF-12L-L	CCW				

QLRCF (Heavy-Duty)

Part Number	Clamping Direction	Allowable Operating Load (N)	Clamping Force (kN)	Weight (g)	Clamping-Bar Projection Range
QLRCF-08R	CW	80	0.5	330	QLRCS-08100 0~22 QLRCS-08125 0~47 QLRCS-08150 0~72
QLRCF-08L	CCW				
QLRCF-12R	CW	150	1.4	950	QLRCS-12125 0~20 QLRCS-12150 0~45 QLRCS-12200 0~95
QLRCF-12L	CCW				

Feature

- Can be used in both vertical and horizontal clamping applications.
- The horizontal style is also available. (see page for QLRC)
- Spring-loaded clamp that provides constant clamping force.
- Long clamping-bar projection range allows clamping a recessed part. (When using your own clamping bar, ensure that the diameter is finished to a h9 or better tolerance)

How To Use

■Operation of CW Type (Invert the operation for CCW type.)

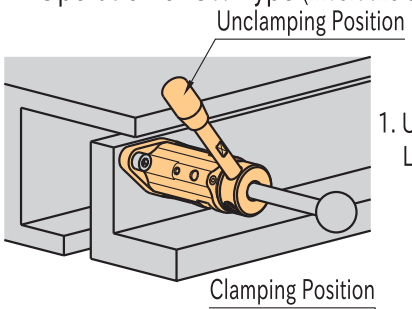

1. Unclamped
   Load or unload a part.

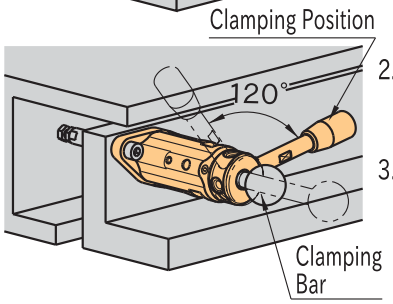

2. Clamping Setup
   Project the clamping bar until it contacts the part.
3. Clamping
   Turn the lever handle (120°) to the clamping position.

■Application Example (Vertical Clamping)

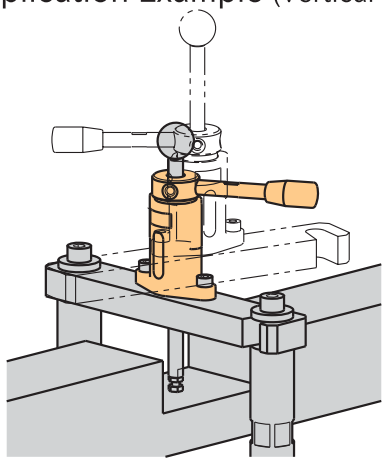

Note

When a reaction force (F) becomes greater than a clamping force, the clamping bar slides back to get a part unclamped.

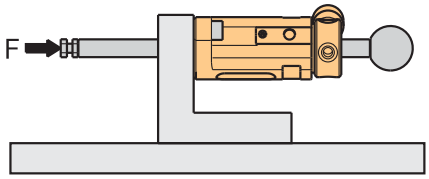

Type	Clamp Releasing Force
QLRCF-08-L	F>0.2kN
QLRCF-12-L	F>0.7kN
QLRCF-08	F>0.5kN
QLRCF-12	F>1.4kN

■How to Mount

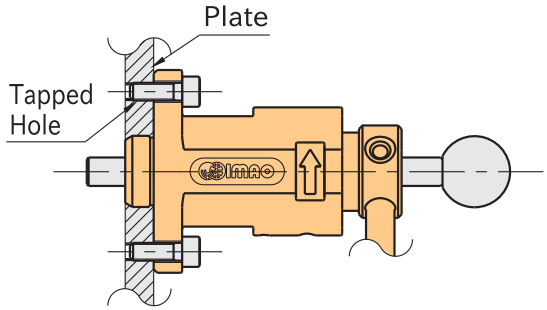

- Face Mounting
  (Use cap screws with one-size smaller threads than mounting-hole threads.)

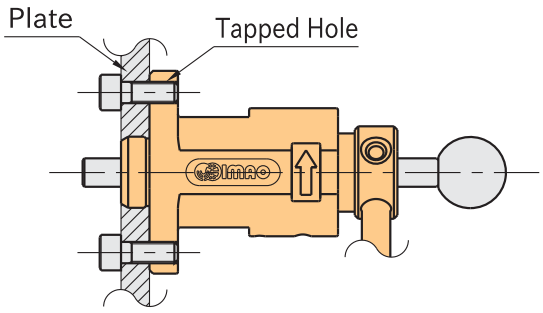

- Back Mounting
  (Use cap screws with threads of the same size as mounting-hole threads.)

QLRCS CLAMPING BARS

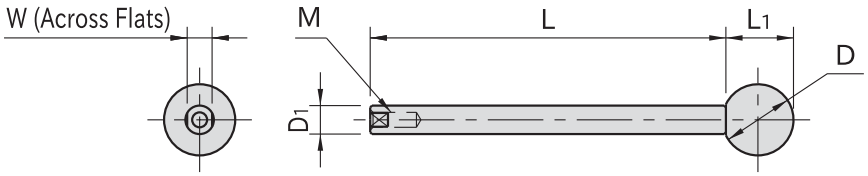

Part Number	D_1 (f8)	L	L_1	D	W	M	Weight (g)
QLRCS-08100	8	100	19	20	7	M4×0.7 Depth 8	50
QLRCS-08125		125					60
QLRCS-08150		150					70
QLRCS-12125	12	125	24	25	10	M6×1 Depth 12	130
QLRCS-12150		150					150
QLRCS-12200		200					190

Arm	Ball Knob
S45C steel Chrome plated	ABS resin Black

How To Use

- QLRC THRUST CLAMPS
- QLRCF THRUST CLAMPS (Vertical)
- Can be cut shorter to a desired length.

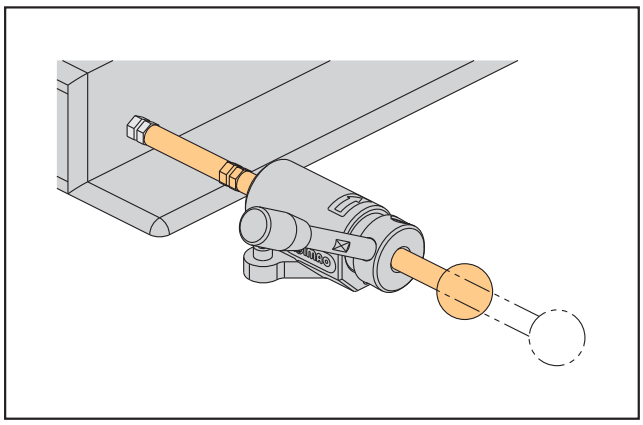

IMAO® fixtureworks®

QLPCT PRECISION THRUST CLAMPS

ROHS

IMAO

(Clamping) (Unclamping)

Body	Clamping Bar
AC7A aluminum Anodized	S45C steel Solid film lubricated
Linkage End	**Knob**
S45C steel Black oxide finished	Phenolic plastic Black

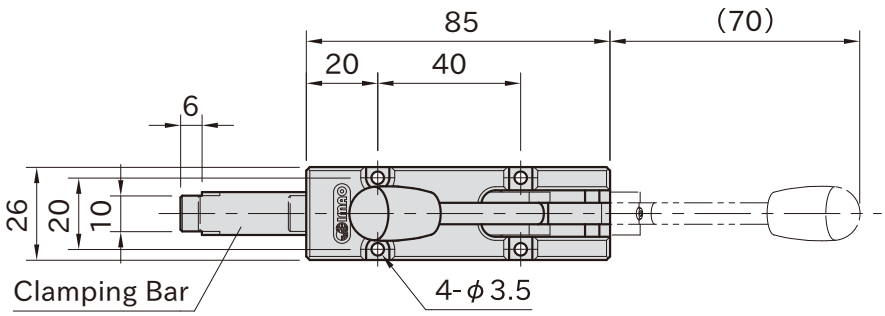

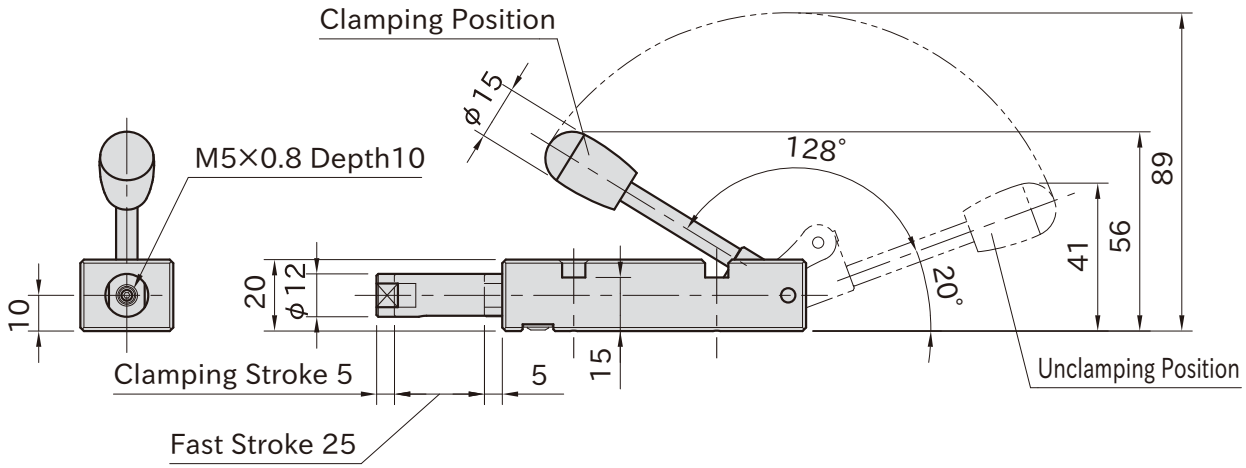

Part Number	Clamping Force(N) Initial - Final *)	Weight (g)
QLPCT20-07	55～ 85	170
QLPCT20-13	90～175	

*) The minimum clamping force at clamping end position, and the maximum clamping force at clamp starting position.

Feature

・Precision Thrust Clamps can clamp at the same position by precise projection of clamping bars.
・Spring-loaded clamp provides constant clamping force.
・The handle clicks to indicate completed clamping.

Note

■How to Install Attachments

When installing an attachment on the clamping bar, lock the clamping bar using a wrench to prevent it from receiving any torque.

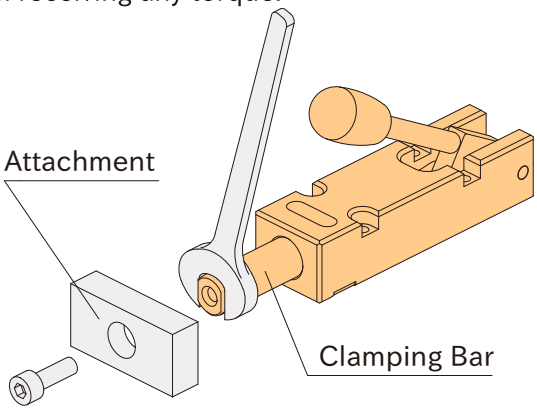

■How to Replace Handle

The handle is replaceable.
When installing/removing a handle, do not apply torque to the Linkage End.

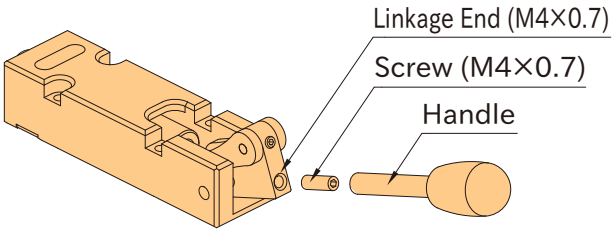

Technical Information

■Allowable Load and Accuracy of Clamping Bar

・Allowable Weight of Attachments on Clamping Bar ･･･500g
・Deflection･･･±0.05
・Allowable Rotation Torque ･･･0.5N･m
・Rotation Accuracy
･･･±0.1°(Under no load)
･･･±1°(Under load at allowable rotation torque)

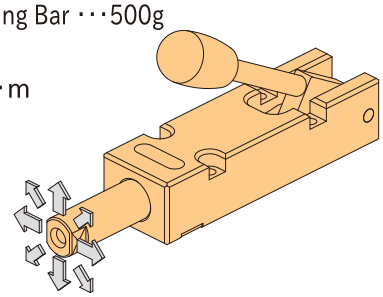

<Allowable Weight / Deflection>

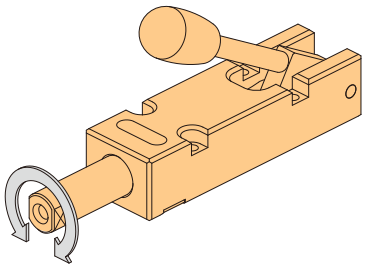

<Allowable Rotation Torque / Rotation Accuracy>

How To Use

For clamping a recessed part / clamping with constant clamping force

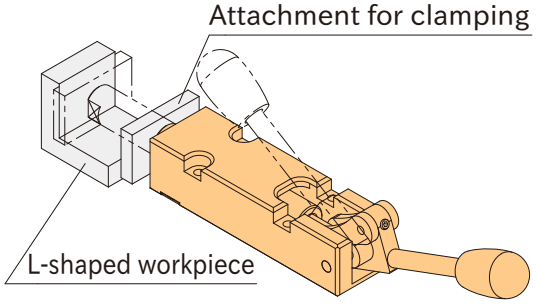

For press-fit fixtures and conduction test fixtures that require precise projection of clamping bars.

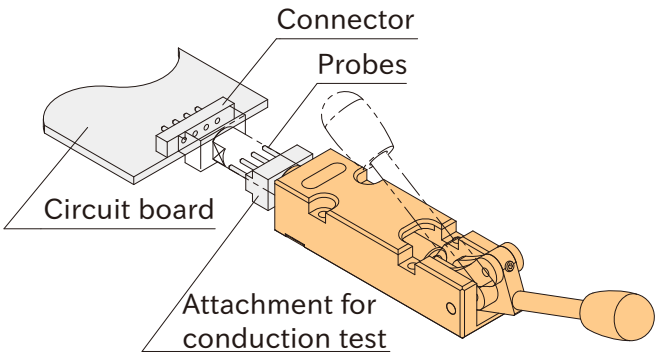

33792 Doreka Dr. Fraser, MI 48026
586-294-1188
cs@fixtureworks.com